# VERTICAL ACTION

# MG2

**MG2B-SL** **MG2SB-SL** **MG2UB-SL**

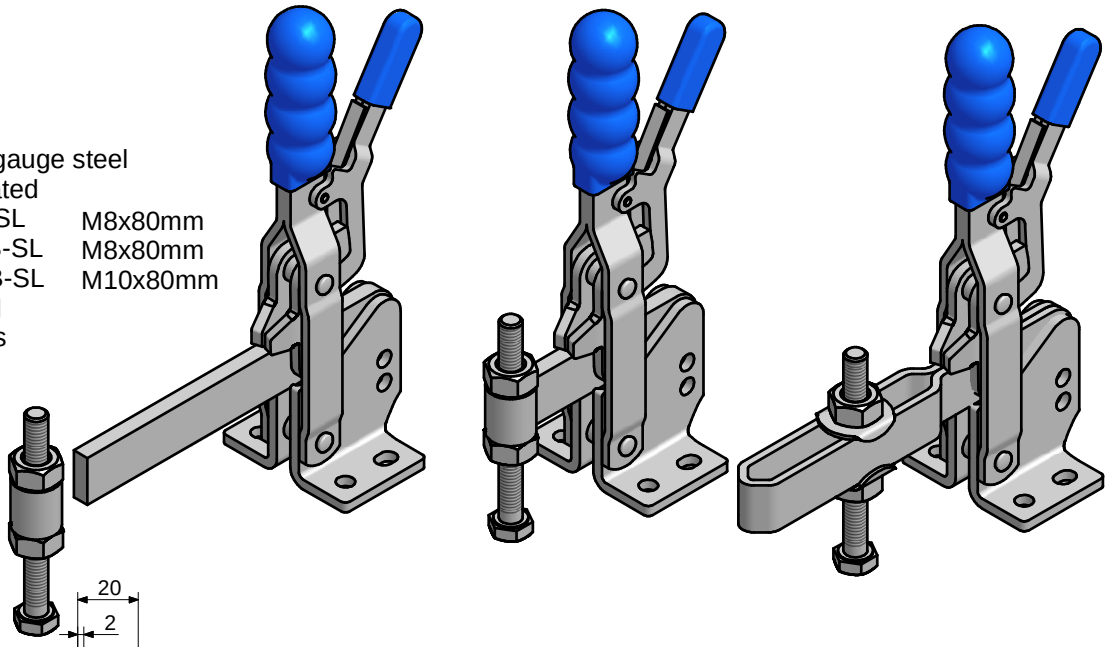

*Material:* Heavy gauge steel
*Finish:* Zinc plated
*Supplied with:* MG2B-SL M8x80mm
MG2SB-SL M8x80mm
MG2UB-SL M10x80mm
*Max holding force:* 290daN
*Weight:* 0.51Kgs
*Clamping pressure:*

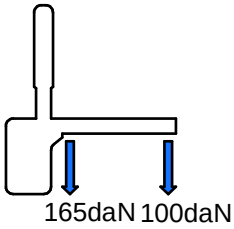


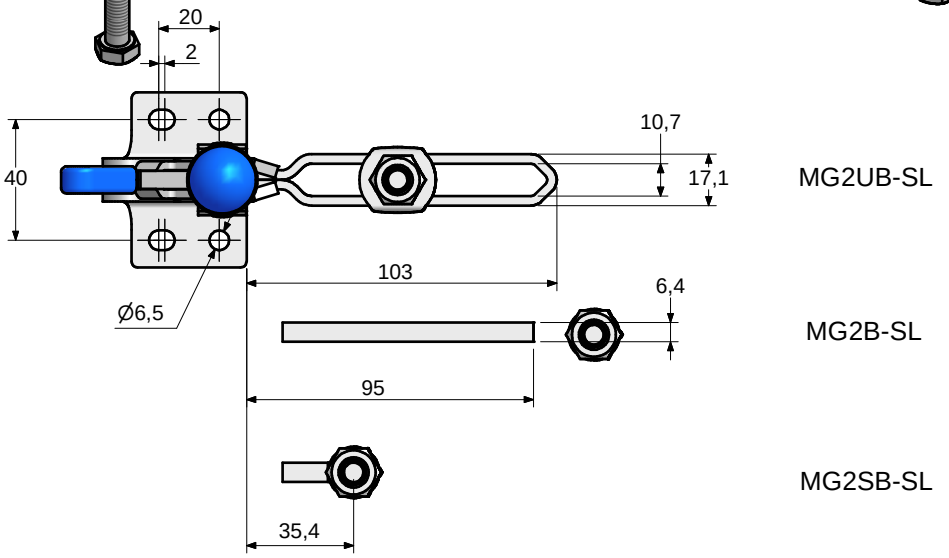


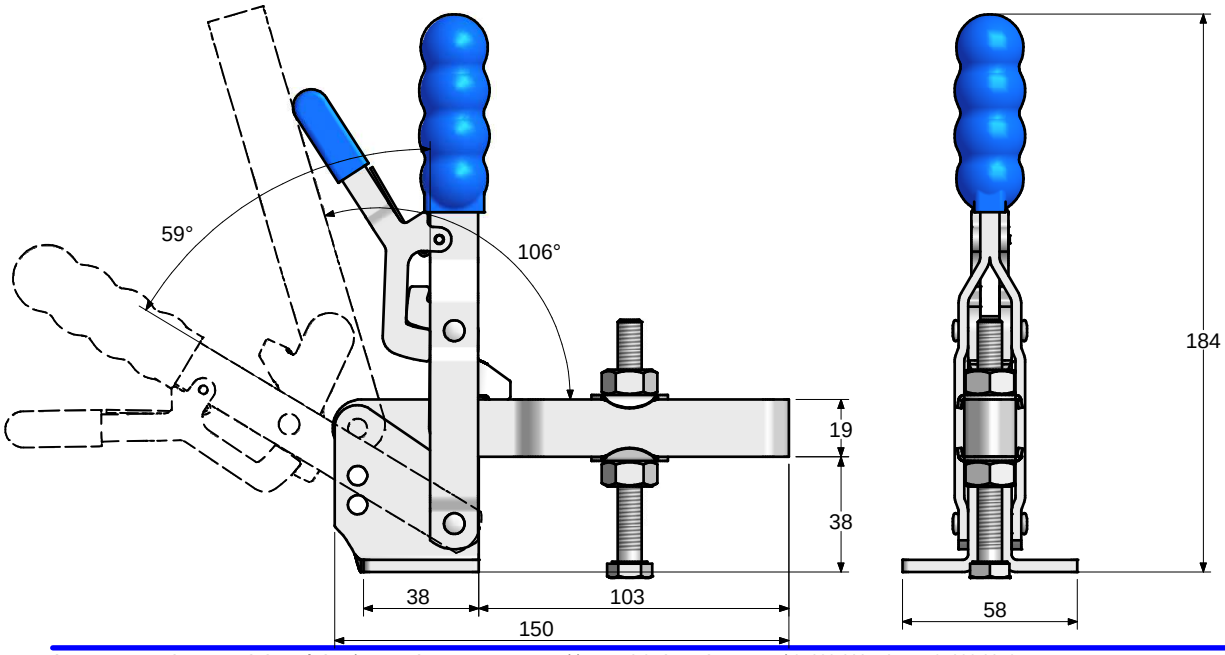

# VERTICAL ACTION

# MG2

| | | |
|---|---|---|
| *Material:* | Heavy gauge steel | |
| *Finish:* | Zinc plated | |
| *Supplied with:* | MG2B-SL | M8x80mm |
| | MG2SB-SL | M8x80mm |
| | MG2UB-SL | M10x80mm |
| *Max holding force:* | 290daN | |
| *Weight:* | 0.51Kgs | |
| *Clamping pressure:* | | |

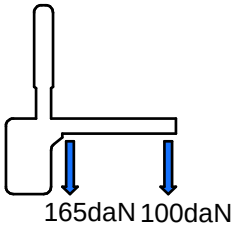


**MG2-SL**

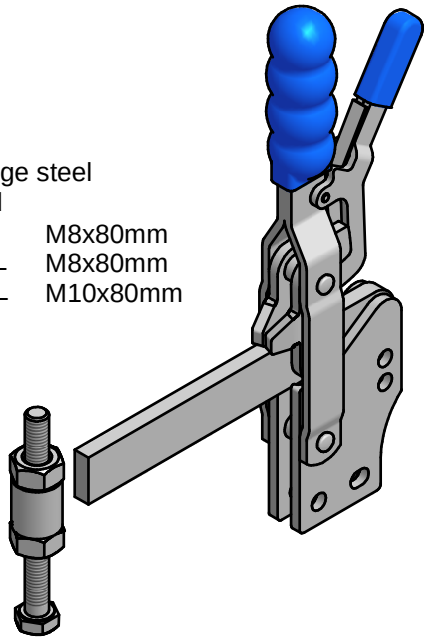

**MG2S-SL**

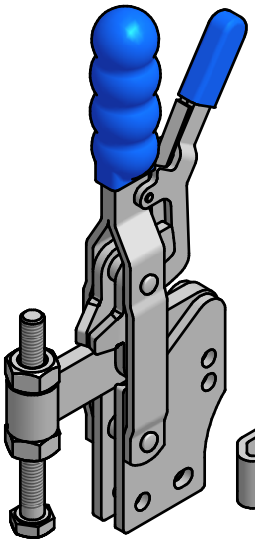
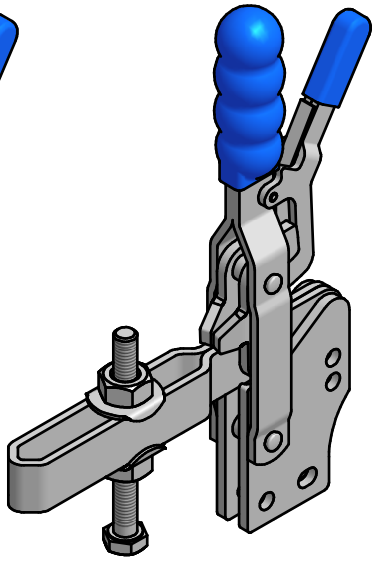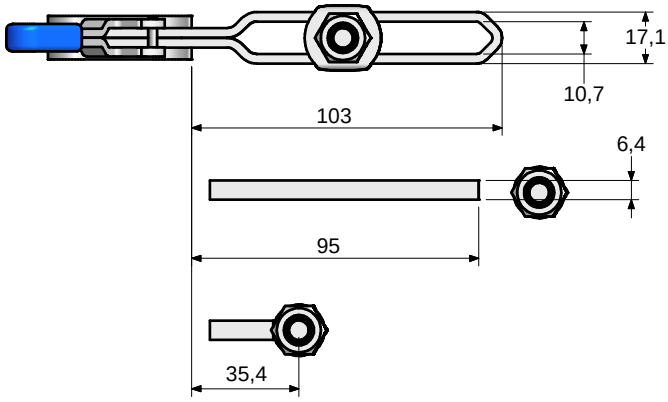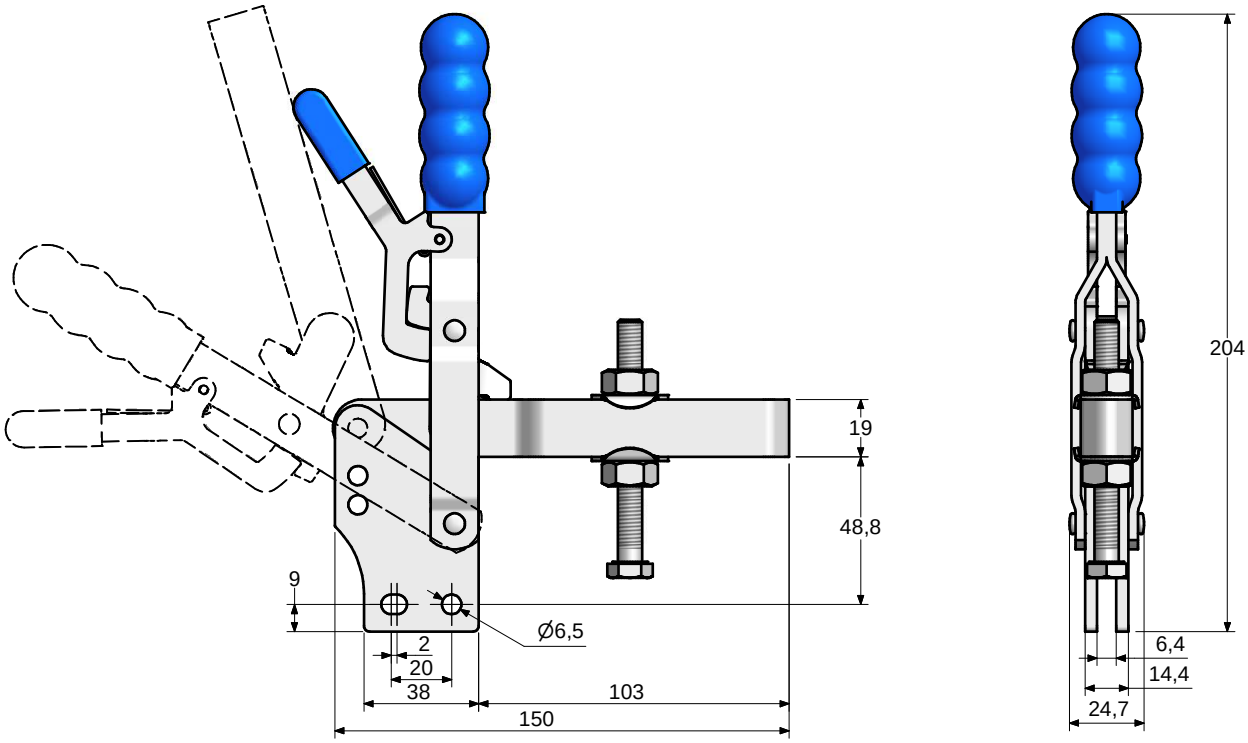
**MG2U-SL**