HOOK CLAMP

HC01

HC01SS

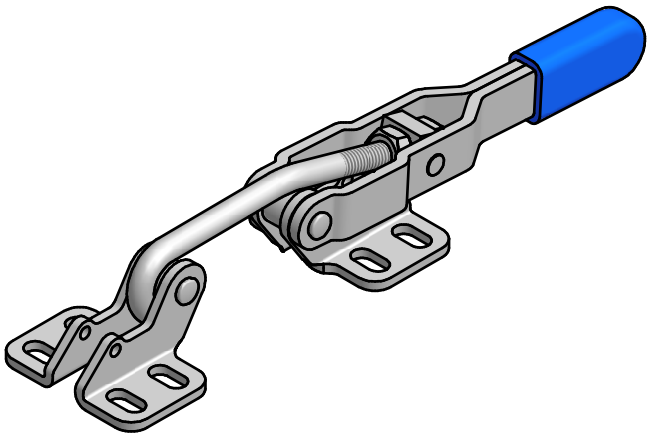
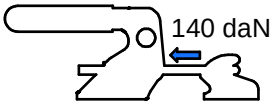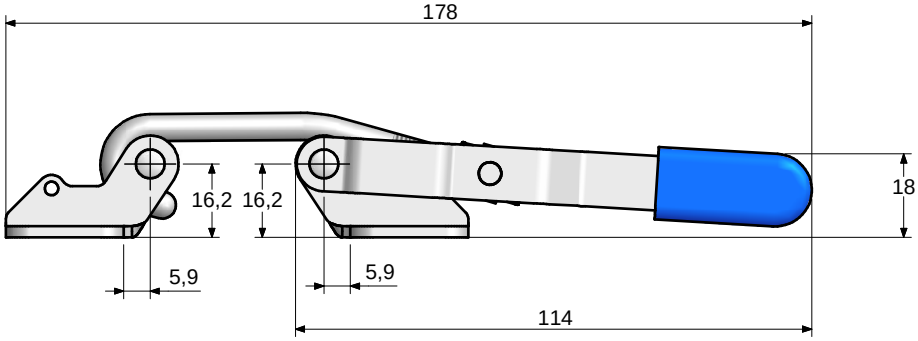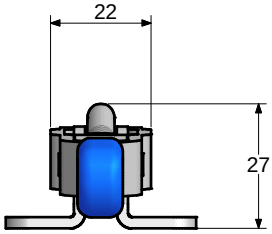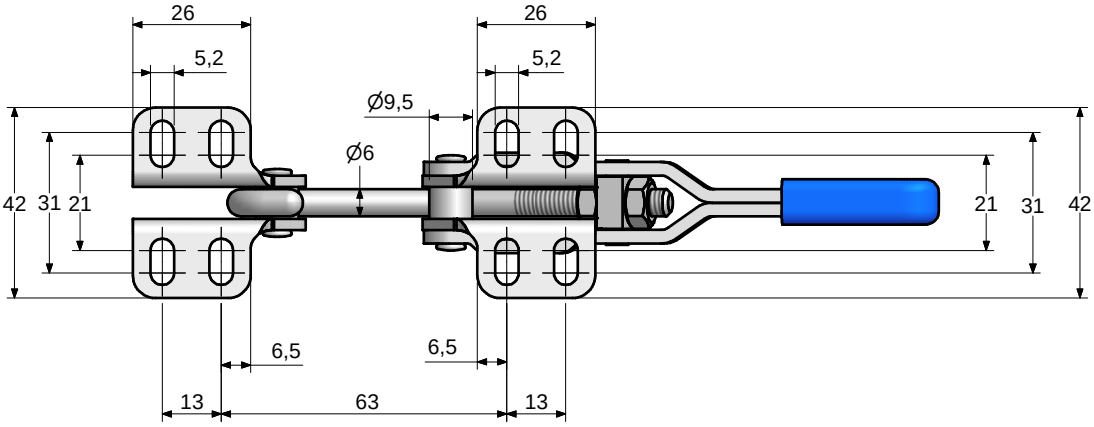
Material:	Stainless steel
Finish:	Polished
Supplied with:	Hook, Latch plate
Max holding force:	190daN
Weight:	0.13Kgs
Clamping pressure: