HOOK CLAMP

HC27H

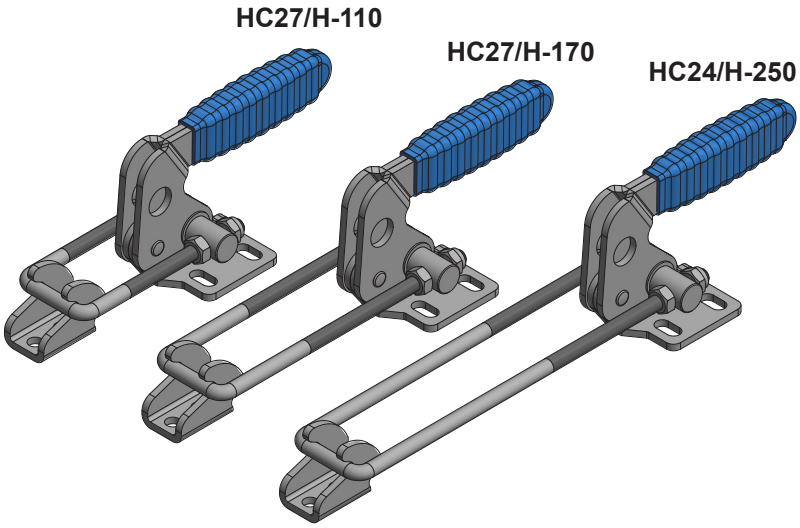

Material: Heavy gauge steel
Finish: Zinc plated
Supplied with: Hook, Latch plate
Max holding force: 710daN
Weight: HC27/H-110 - 0.72Kgs
HC27/H-170 -
HC27/H-250 -
Clamping pressure:

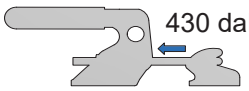

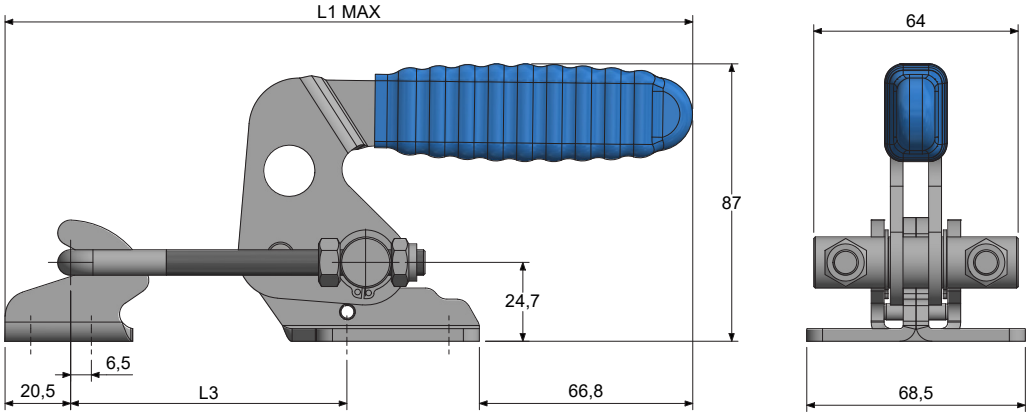

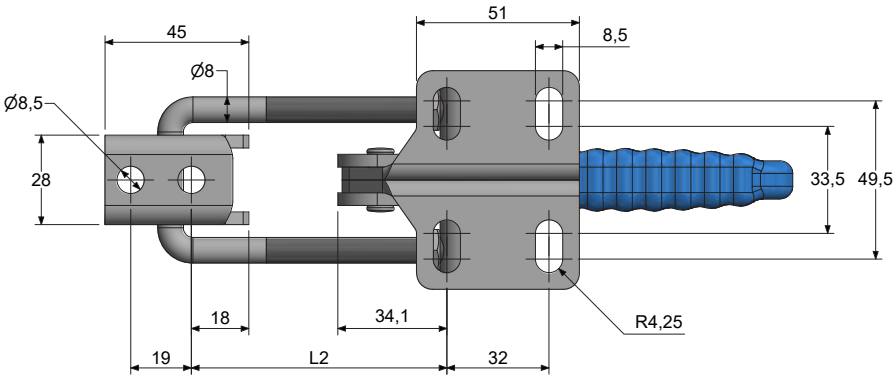

PART No.	DIM `L1`	DIM `L2`	DIM `L3`
HC27/H-110	215	65-80	72-87
HC27/H-170	275	65-140	71-146
HC27/H-250	350	138-215	144-221

HC27/H-SS Stainless steel option available